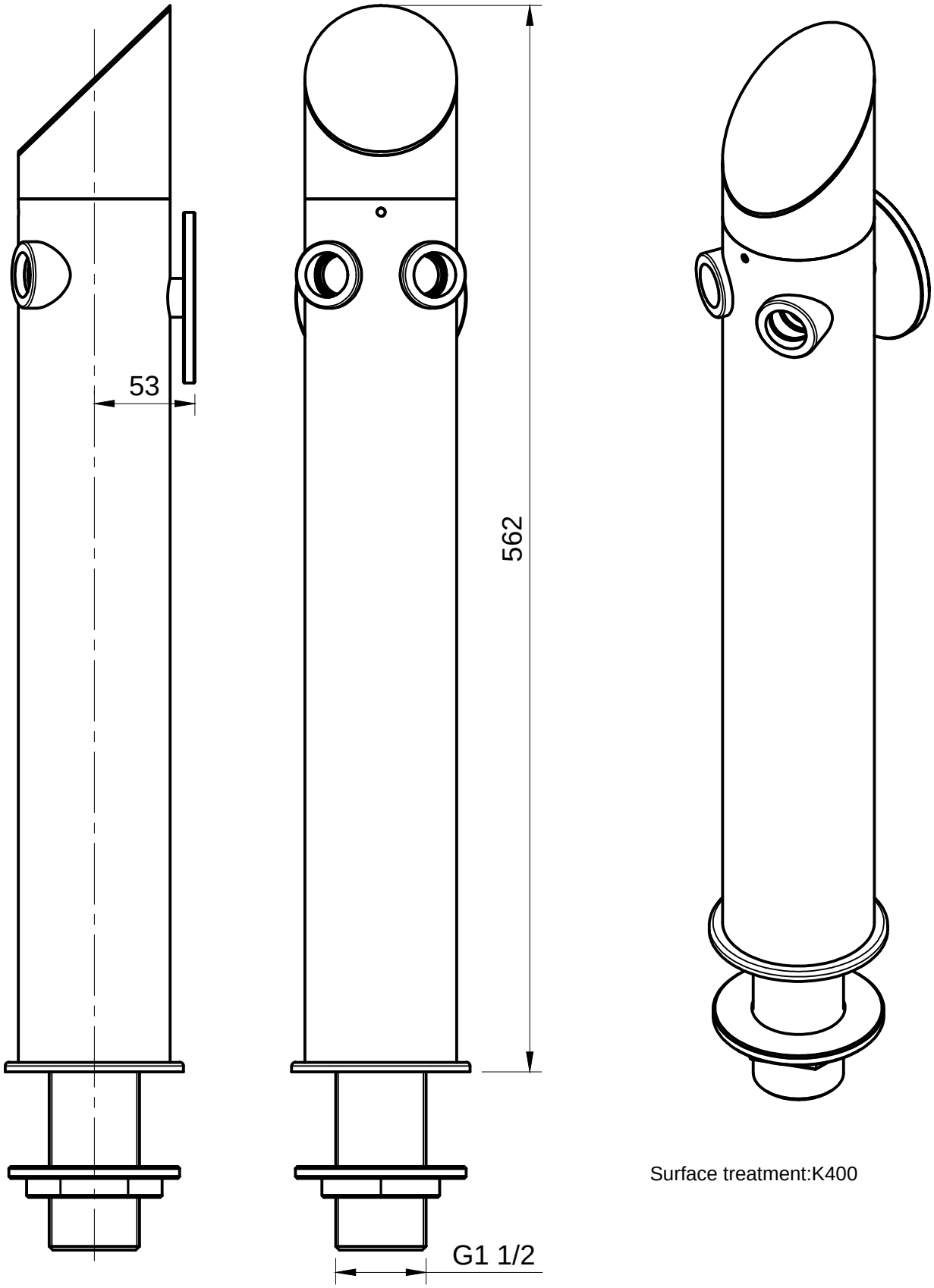

Surface treatment:K400

For parts there is no tolerance marked, please according to the below sheet.

Dimension	Tolerance					
>0.5-3	Ñ0.05					
>3-6	Ñ0.10					
>6-30	Ñ0.13					
>30-120	Ñ0.20					
>120-400	Ñ0.30					
400 above						

Part number	03.11980
Part name	Zapftower GRAZ Edelstahl, K400, 2-ltg (ohne Zapfhª hne)
Raw material	